USA MANUFACTURER
SINCE 1933

FLOMATIC® VALVES

High Quality Valves Built To Last...

FLANGED
BUTTERFLY VALVES

FLOMATIC AZURE SERIES
NSF/ANSI 61 - AWWA C504

Flomatic Valves is a certified manufacturer under ISO 9001-2015 and ISO 14001-2015 quality and environmental systems

FLANGED **BUTTERFLY VALVES**
AWWA C504

The Flomatic Model 45 butterfly valves are manufactured in accordance with the latest version of AWWA C504. The Azure Series butterfly valves are designed with a tight closing, rubber seated design providing bi-directional bubble tightness. The valve is suitable for throttling service and/or operation after long periods of inactivity.

Certified to NSF/ANSI 61

Available in a size range from 3" - 24", Flomatic's AWWA C504 butterfly valves are hydrostatic and leak tested in accordance with AWWA C504 at Flomatic's manufacturing plant in Glens Falls, NY.

Flomatic's AWWA C504 Butterfly Valves are available in a variety of configurations. Gear Operated, Handle Operated and Electrical Actuated (110/120 VAC standard, additional voltages available, Battery backup for power loss positioning, and 'Smart Card' options for valve positioning.)

Flomatic Valves is a manufacturer under a certified ISO 9001-2015 and ISO 14001-2015 quality and environmental systems.

FEATURES & BENEFITS

- ANSI/AWWA C504
- NSF/ANSI 61
- Pressure Class 150B
- Fusion Bonded Epoxy Coating, Conforming to NSF 61 and AWWA Standard C550
- Stainless Steel Shaft
- V-Type Packing Design, Buna-N
- Corrosion Resistant Shaft ASTM A276 type 316 Stainless Steel
- Ductile Iron Body (ASTM A536 65-45-12) for Greater Strength and Pressure Rating
- Hydrostatic and Leak Tested in Accordance with AWWA C504
- Available with lever, manual gear, pneumatic, and electric actuators
- Electrical actuators comply with AWWA C542
- AWWA valves include standard ISO mounting pads

ISO 9001 ISO 14001 INTEGRATED MANAGEMENT

ANAB ACCREDITED MANAGEMENT SYSTEMS CERTIFICATION BODY

FOR REFERENCE USE ONLY, SPECIFICATIONS SUBJECT TO CHANGE WITHOUT NOTICE.
PLEASE REFER TO OUR WEBSITE WWW.FLOMATIC.COM FOR ADDITIONAL TECHNICAL INFORMATION

ADDITIONAL FEATURES
AZURE® SERIES 45

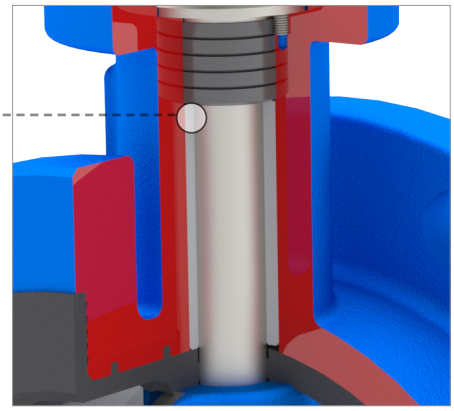

Upper Shaft Bearing: 304 Stainless Steel, Teflon Coated.

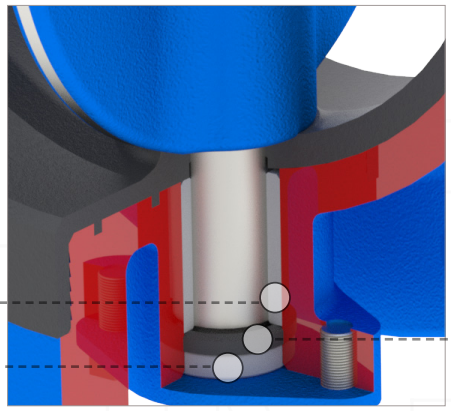

Thrust Bearing: Nylon Shaft Support.

Lower Shaft Seal: For added leak protection.

Lower Shaft Bearing: Shaft Side Loading Protection.

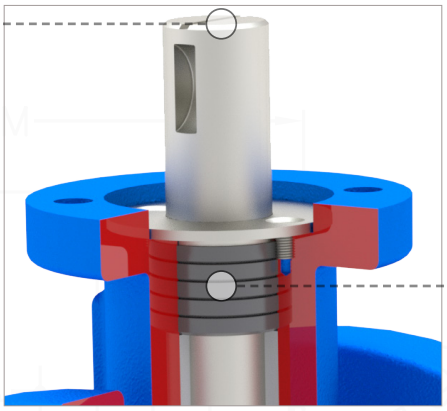

Shaft: Keyed one piece ASTM A276 type 316 stainless steel through shaft design providing minimal deflection. Slotted shaft top indicates position.

Packing: V-type Packing design. Buna-N packing is self adjusting and wear compensating.

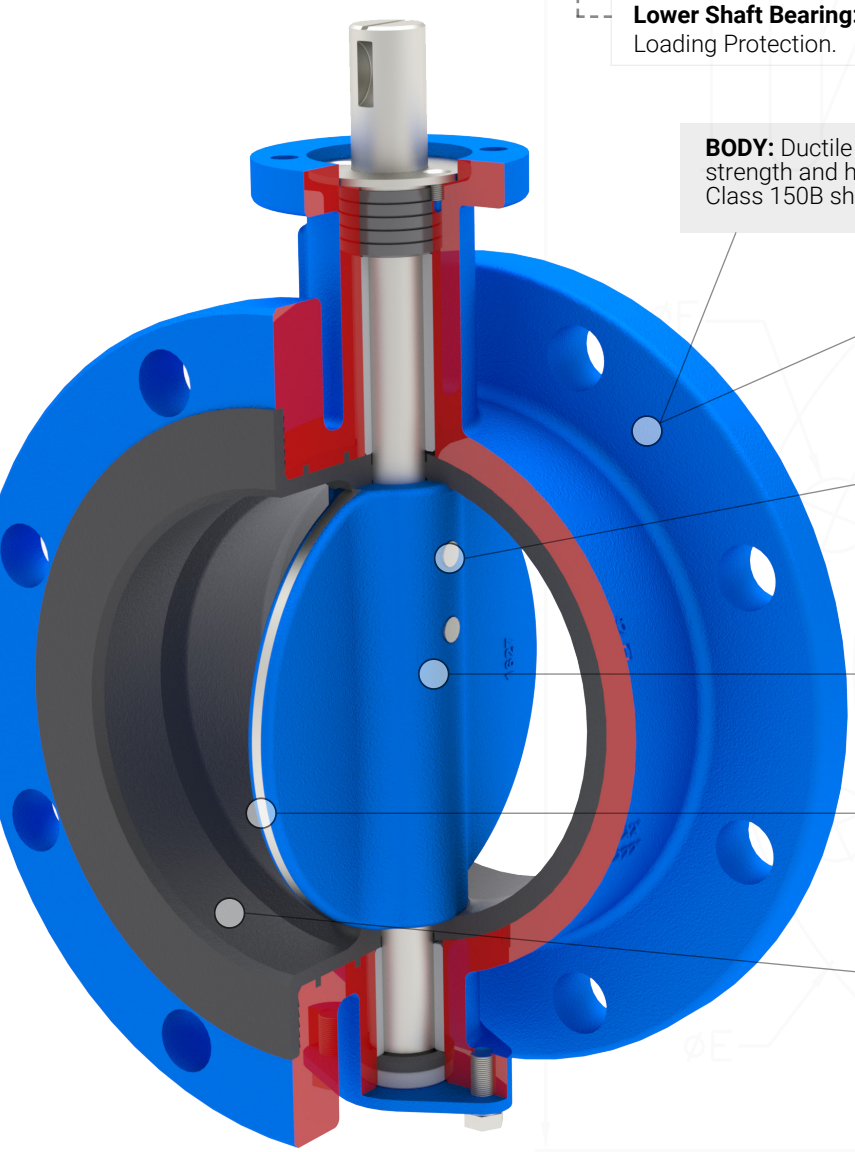

BODY: Ductile iron ASTM A536 for greater strength and higher pressure rating. AWWA Class 150B short body design.

PAINT: Fusion bonded epoxy powder conforming to NSF 61 and AWWA Standard C550.

DISC / SHAFT CONNECTION: Two (2) taper pins providing a positive leak-proof connection between the shaft and disc.

VALVE DISC: Center positioned for higher flow capability. Cast Ductile Iron ASTM A536 with stainless steel type 316 edges for strength and longer life. Rounded machined edge for lower torque. 3" and 4" sizes have all cast ASTM A351 type 316 stainless steel disc.

DISC EDGE: Stainless Steel Type 316

SEAT: Standard NBR (Buna-N) (other materials available) seat bonded and vulcanized to the body of the valve in compliance with AWWA standard C504. Resilient seat fully encapsulates the body, providing further corrosion protection and longer life.

FOR REFERENCE USE ONLY, SPECIFICATIONS SUBJECT TO CHANGE WITHOUT NOTICE.
PLEASE REFER TO OUR WEBSITE WWW.FLOMATIC.COM FOR ADDITIONAL TECHNICAL INFORMATION

TECHNICAL DATA
AZURE® SERIES 45

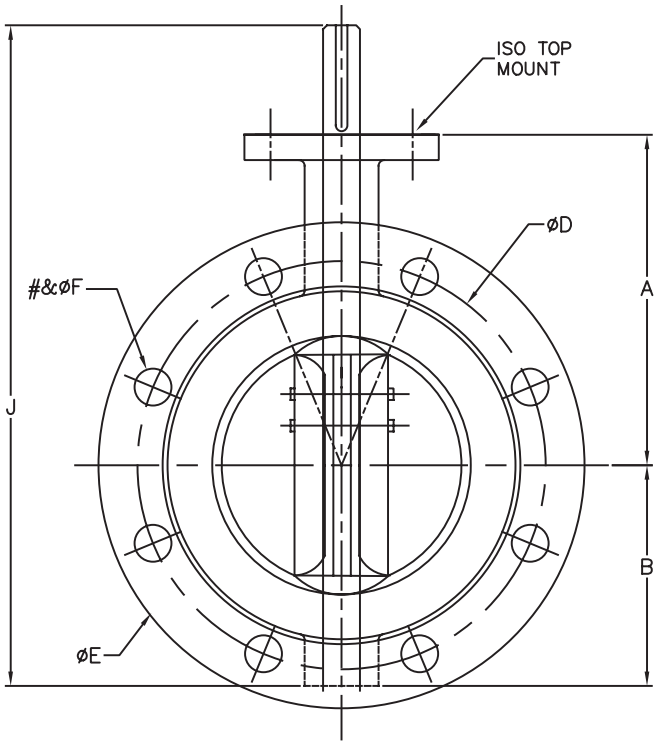

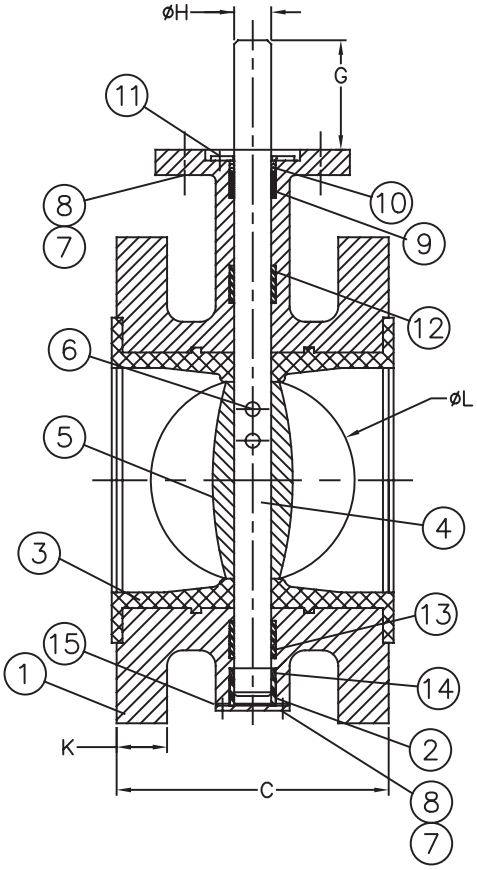

Item #	Description	Material	Item #	Description	Material
1	Body	Ductile Iron A536	9	Packing V-Type	Buna-N
2	Lower Hole Gasket	Nylon	10	Upper Hole Gasket	Stainless Steel
3	Seat*	Buna-N	11	Garter Spring	AISI 1066
4	Shaft	316SS	12	Upper Bearing	304SS / Teflon
5	Disc	Ductile Iron w/316SS Edge	13	Lower Bearing	304SS / Teflon
6	Pin/Nut/Washer/O-Ring	304SS/Rubber	14	Combined Ring	Buna-N
7	Bolts	Stainless Steel	15	Bottom Cover Gasket	Buna-N
8	Washer	Stainless Steel			

Max Temp 180°F (82°C)
Max Pressure 200psi (14bar)
Max Pressure Differential 150psi (10bar)
* EPDM Optional

FLOMATIC - Smart Card
Model FDHC-100

The Flomatic FDHC-100 is a high performance Digital positioner intended to control AC actuators, providing 450 points of resolution with quarter turn actuators ranging from 2 sec to 120 sec and rated for 25% duty or more.

The FDHC-100 has many automatic advanced features that will enhance any actuator while making it easy to install and set up. The unit can be configured for various command types (4-20 mA, 1-5 V, 0-5 V, 0-10 V, or a digital command) and its default operation upon loss of command. Various option modules are easily plugged into the unit, providing other features such as a position feedback.

FEATURES

- Positions to ±0.1° with quarter-turn actuators ranging from 2 sec to 120 sec
- Adaptive Control
- Polarity Detection
- Electronic Brake
- Stall Detection
- Automatic Duty Cycle Control

AZURE® SERIES 45
FLANGED BUTTERFLY VALVES

AZURE - MODEL 45
Gear Operated

Ductile iron flanged body. ASTM A536 ductile iron disc with stainless type 316 edge. Seat standard NBR (EPDM optional) vulcanized. Designed to AWWA standard C504, class 150B. Electric / Pneumatic actuation available.

TEMP MAX: 180ºF (80ºC)

PRESSURE MAX: 200 PSI

SIZES: 3" THRU 24"

Proof of Design Available

NSF Certified to NSF/ANSI 61

AZURE - MODEL 45
Electric Actuated

Azure® butterfly valve, manual hand-wheel override for open/close service.

ADDITIONAL OPTIONS

- 110/120 VAC standard – Inquire for other voltages
- Battery backup for power loss positioning
- 'Smart Card' options for valve positioning.
  - Basic 4-20 mA input and output
  - Can be configured for 1-5 V, 0-5 V, 0-10 V or digital command
  - Default setting for loss of command
  - Feedback
  - Repeat cycle timer
  - Log rate control

TEMP MAX: 180ºF (80ºC)

PRESSURE MAX: 200 PSI

SIZES: 3" THRU 24"

Proof of Design Available

NSF Certified to NSF/ANSI 61

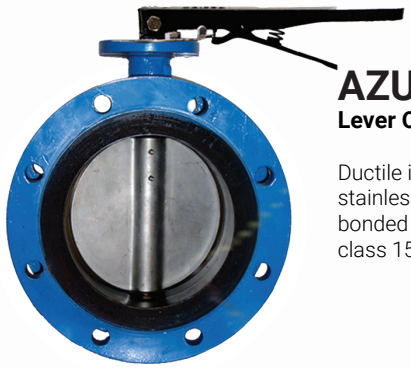

AZURE - MODEL 45
Lever Operated

Ductile iron flanged body. ASTM A536 ductile iron disc with stainless type 316 edge. Seat standard NBR (EPDM optional) bonded and vulcanized. Designed to AWWA standard C504, class 150B. Electric / pneumatic actuation available.

TEMP MAX: 180ºF (80ºC)

PRESSURE MAX: 200 PSI

SIZES: 3" THRU 24"

Proof of Design Available

NSF Certified to NSF/ANSI 61

FOR REFERENCE USE ONLY, SPECIFICATIONS SUBJECT TO CHANGE WITHOUT NOTICE.
PLEASE REFER TO OUR WEBSITE WWW.FLOMATIC.COM FOR ADDITIONAL TECHNICAL INFORMATION

FLOMATIC® VALVES

Since 1933, Manufacturing

The Most Complete Line of Valves for Water and Wastewater Applications

FIND OUR COMPLETE VALVE OFFERING AT

WWW.FLOMATIC.COM

FLOMATIC CORPORATION

15 Pruyn's Island Drive,
Glens Falls, New York 12801
Phone: (800) 833-2040
Fax: (800) 314-3155

WWW.FLOMATIC.COM

LIMITED ONE YEAR WARRANTY: The Flomatic Corporation warrants that its Butterfly Valves in all sizes are free from defects in materials and workmanship. Flomatic will replace any valve covered by this warranty found to be defective within one year from time of sale. This warranty will be void if the product has been modified in any way by the purchaser, or is subject to unreasonable use.

nqa. ISO 9001 ISO 14001 INTEGRATED MANAGEMENT

ANAB ANSI National Accreditation Board ACCREDITED ISO/IEC 17021-1 MANAGEMENT SYSTEMS CERTIFICATION BODY

All rights reserved © 2020 Flomatic Corporation

AZURE AWWA 3/2020 1M